BAYLAN
ELECTRICITY METERS

BM.01
Single Phase Active Import Electronic Electricity Meter



CE 1783
TSE
Test
TS EN ISO/IEC 17025
AB-0177-T
YÖNETİM SİSTEMİ BELGELERİMİZ
ISO 14001
ISO 27001
ISO 45001

GENERAL FEATURES

- MID (Measuring Instruments Directive) Certified
- Data storage without energy and non-volatile memory
- It allows for the configuration of 8 distinct time slots throughout the day, with the active energy consumed during each slot assignable to one of 4 different tariffs. It supports separate time slot and tariff configurations for 3 different day types (weekdays, Saturdays, and Sundays).
- It automatically adjusts for daylight saving time (summer/winter time) if this feature is enabled.
- Tariff settings, the meter's date and time, and the daylight saving time status can be modified by authorized personnel.
- In the event that the top cover is opened, the meter records the dates of the first 10 such occurrences, as well as the total number of times the cover has been opened.
- In the event that the terminal cover is opened, the meter records the dates of the 24 most recent occurrences, as well as the total number of times the cover has been opened.
- The meter stores energy consumption data for each tariff over the past 12 months, along with the maximum demand values, including the date and time for each.
- The meter can record load profiles across 5 channels with 15-minute intervals, covering the last 180 days.
- The meter logs the dates of the 10 most recent current connection errors (such as reverse current).
- The meter records the date and time of the 200 most recent power outage events.
- Designed for long-term, maintenance-free operation.
- Long life and maintenance free operation

TEKNİK ÖZELLİKLER

Meter Type	Single-phase, 2-wire, Active Electronic Electricity Meter
Measurement Type	Dual-Channel Measurement
Accuracy Class	B
Connection Type	Direct
Reference Voltage (Un)	230 V
Operating Voltage Range	0.8Un to 1,15Un
Operating Frequency	50 Hz ±5%
Starting Current (Ist)	20 mA (0.04 × Itr)
Minimum Current (Imin)	0,25 A
Transitional Current (Itr)	0,5 A
Reference Current (In)	5 A
Maximum Current (Imax)	100 A
IP Rating	IP54 (Outdoor)
Protection Class	Two (2)
Relative Humidity	Max. 95%
Operating Temperature	-40 °C, +70 °C (3K7)
Storage Temperature	0 °C, +30 °C
Mechanical Environment Class	M1
Electromagnetic Environment Class	E2
Voltage Circuit Power Consumption	<1 W, 5 VA
Current Circuit Power Consumption	<4 VA
ESD Voltage Withstand	Contact: 8 kV, Air: 15 kV
Impulse Voltage	6 kV
Meter Constant	1000 imp/kWh
LCD Display	6+3, Backlit (Optional)
Communication	Optical, RS485 (Optional), 300–19200 Baud
	(TS EN 62056-21)
Battery Life (In-service / In-storage)	≥ 10 years / 4 years
Real-Time Clock Accuracy	< 0.5 sec/day (EN 62054-21)
Relevant Standards	TS EN 50470-1, TS EN 50470-3

DIMENSIONS

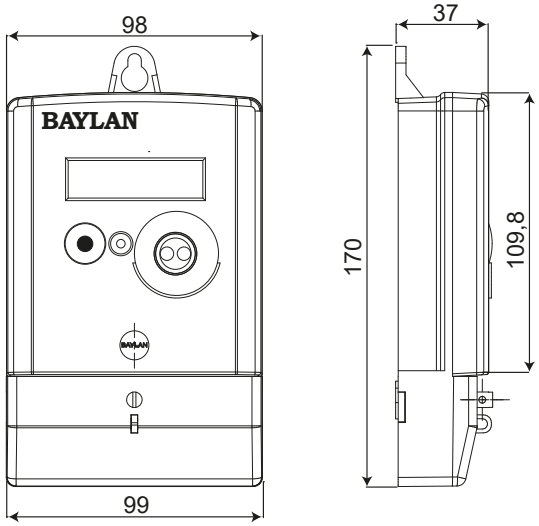

"Due to continuous development of our products, we reserve the right to modify our product design or construction without prior notice."